ZPC - EPOXY AND ZINC COATED CAST IRON HUBLESS BEND

MANUAL SEWERAGE PIPE

COMPLY WITH BS EN877: 2021
BS EN 598: 2007

***Availability upon request**

COATING CHARACTERISTIC		
ITEM	LAYERS	THICKNESS
1	Internal Coating	Min. 250µm
2	A Lay Of Metallic Zinc	130g/m^2
3	External Coating	Average thickness ≥70µm, local minimum thickness not less than 50µm

15˚ BEND

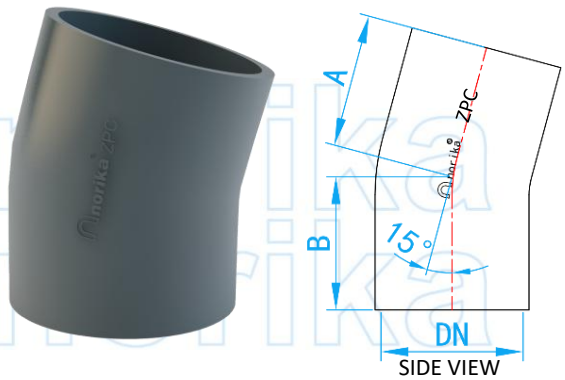

SIDE VIEW

DIMENSIONS

SKU	DN (mm)	A (mm)	B (mm)	WEIGHT (kg)
HUBZB15050	50	40	40	0.6
HUBZB15080	75	50	50	0.8
HUBZB15100	100	50	50	1.0
HUBZB15125	125*	60	60	1.7
HUBZB15150	150	65	65	2.5
HUBZB15200	200	80	80	4.6

30˚ BEND

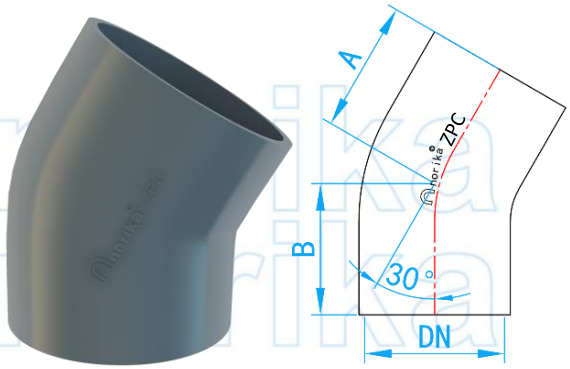

SIDE VIEW

DIMENSIONS

SKU	DN (mm)	A (mm)	B (mm)	WEIGHT (kg)
HUBZB30050	50	45	45	0.5
HUBZB30080	75	60	60	0.8
HUBZB30100	100	60	60	1.3
HUBZB30125	125*	70	70	2.0
HUBZB30150	150	80	80	3.0
HUBZB30200	200	95	95	5.4
HUBZB30250	250	110	110	9.7
HUBZB30300	300	130	130	15.5

45˚ BEND

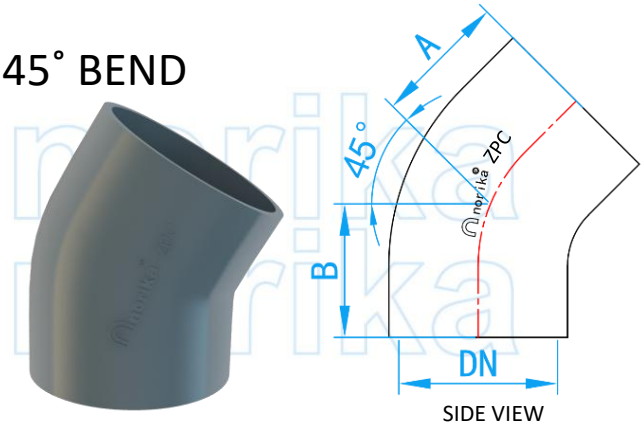

SIDE VIEW

DIMENSIONS

SKU	DN (mm)	A (mm)	B (mm)	WEIGHT (kg)
HUBZB45050	50	60	60	0.5
HUBZB45080	75	60	60	1.0
HUBZB45100	100	70	70	1.6
HUBZB45125	125*	80	80	2.3
HUBZB45150	150	90	90	3.0
HUBZB45200	200	110	110	6.2
HUBZB45250	250	130	130	13.2
HUBZB45300	300	155	155	17.3

88˚ BEND

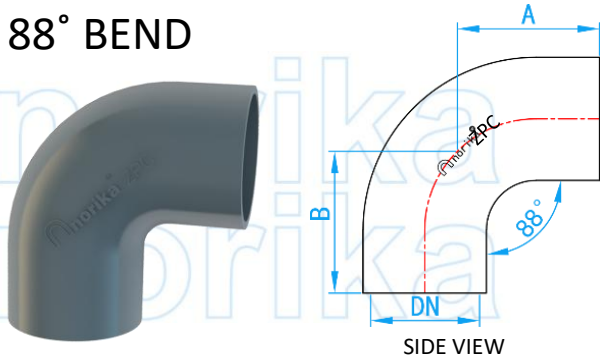

SIDE VIEW

DIMENSIONS

SKU	DN (mm)	A (mm)	B (mm)	WEIGHT (kg)
HUBZB90050	50	75	75	0.7
HUBZB90080	75	95	95	1.4
HUBZB90100	100	110	110	2.1
HUBZB90125	125*	125	125	3.2
HUBZB90150	150	145	145	4.9
HUBZB90200	200	180	180	8.8
HUBZB90250	250	225	225	17.9
HUBZB90300	300	260	260	28.0

Notes: The tolerance for Weight is ±10%.

Copyright. All Rights Reserve. Norika®
Norika is constantly seeking product improvements. Therefore, its products are subject to change if deemed necessary.